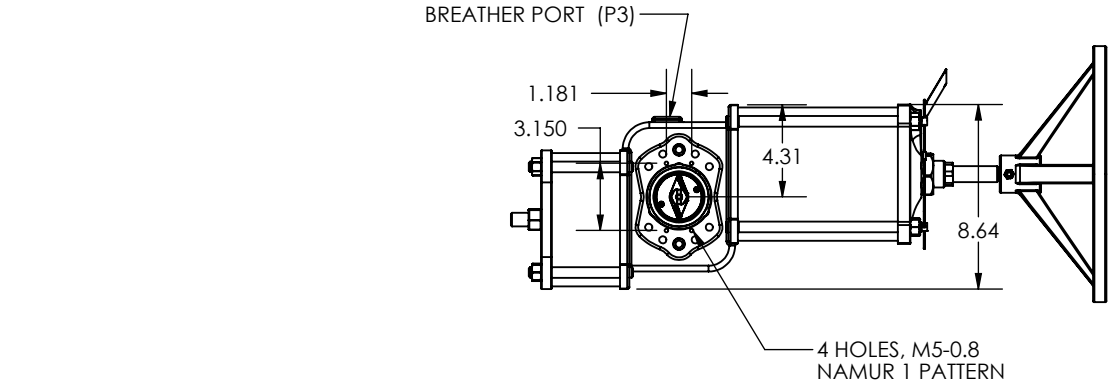

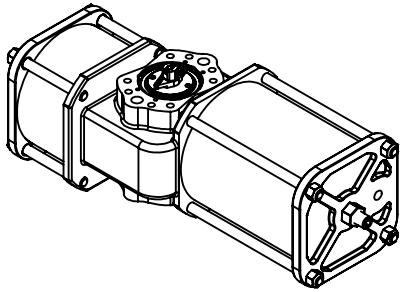

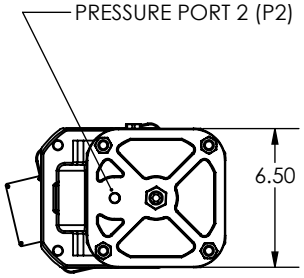

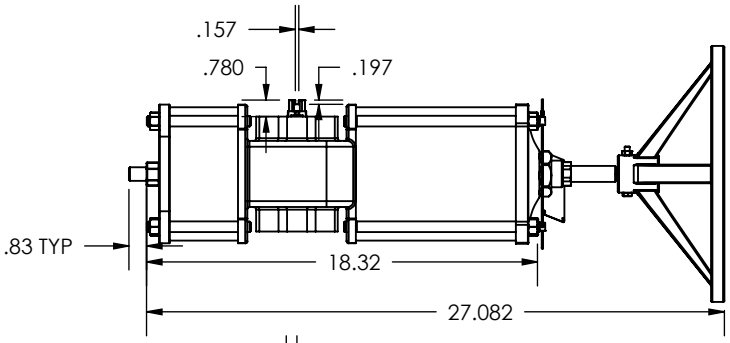

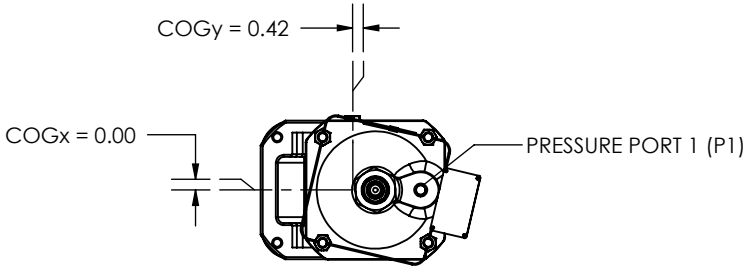

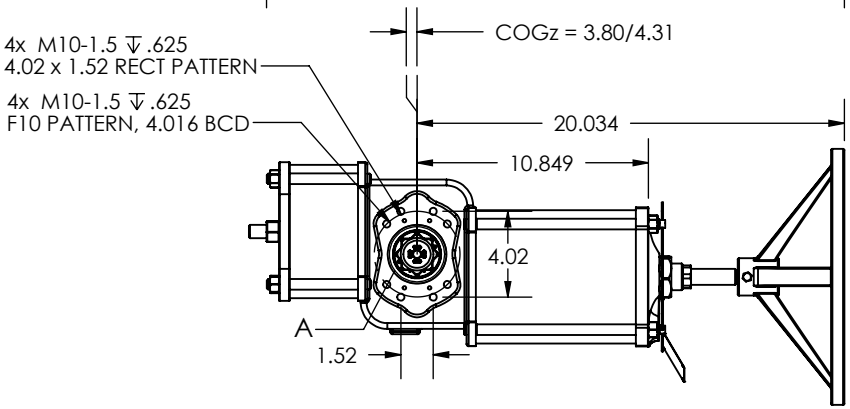

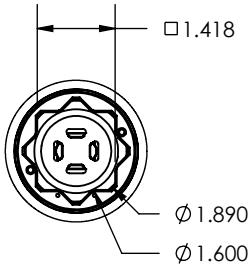

DETAIL A
SCALE 2 : 7

SHOWN WITH NAMUR ACCESSORY DRIVE. IDENTICAL MOUNTING PATTERNS AND SHAFT DRIVE EXIST ON BOTH SIDES, NAMUR ACCESSORIES MAY BE MOVED TO OPPOSITE SIDE.

MOUNTING PATTERNS: F10 AND 4.02x1.52 RECT

SHAFT: 36MM FEMALE DOUBLE SQUARE, 1.000 INCHES DEEP (MEASURED FROM MOUNTING SURFACE)

PORT SIZES AS ORDERED, 1/4 NPT STANDARD

CoG MEASUREMENTS SHOWN WITH 12-INCH HANDWHEEL IN EXTENDED POSITION

SHOWN WITH 12-INCH DIAMETER ELEVATED HANDWHEEL. ACTUAL SIZE MAY VARY AS ORDERED.

REV.	DESCRIPTION	DATE	DRAWNBY
A	INITIAL	19-JAN-2015	JRH

STATUS	APPROVAL
Released	JRH 19 Jan 15

DO NOT SCALE DRAWING

PROPRIETARY AND CONFIDENTIAL
THE INFORMATION CONTAINED IN THIS DRAWING IS THE SOLE PROPERTY OF QTRCO, INC. ANY REPRODUCTION IN PART OR AS A WHOLE WITHOUT THE WRITTEN PERMISSION OF QTRCO, INC. IS PROHIBITED.

Except as shown, Dimensions are inches and standard Tolerances are:

Fractional +/- N/A
Angular +/- N/A
1 Decimal +/- N/A
2 Decimal +/- N/A
3 Decimal +/- N/A

MATERIALS AS SPECIFIED BY PRODUCT LINE STANDARDS AND ORDERED OPTIONS. WEIGHT SHOWN WITH HEAVISET MATERIAL OPTIONS.

DESCRIPTION

DWG. NO. **Qx210SD-JR-DIM-01**

REVISION A

WEIGHT (Pounds): 82.480

SHEET 1 OF 1
1 of 1 if not shown

SIZE A

FORMAT DCN00481.02B