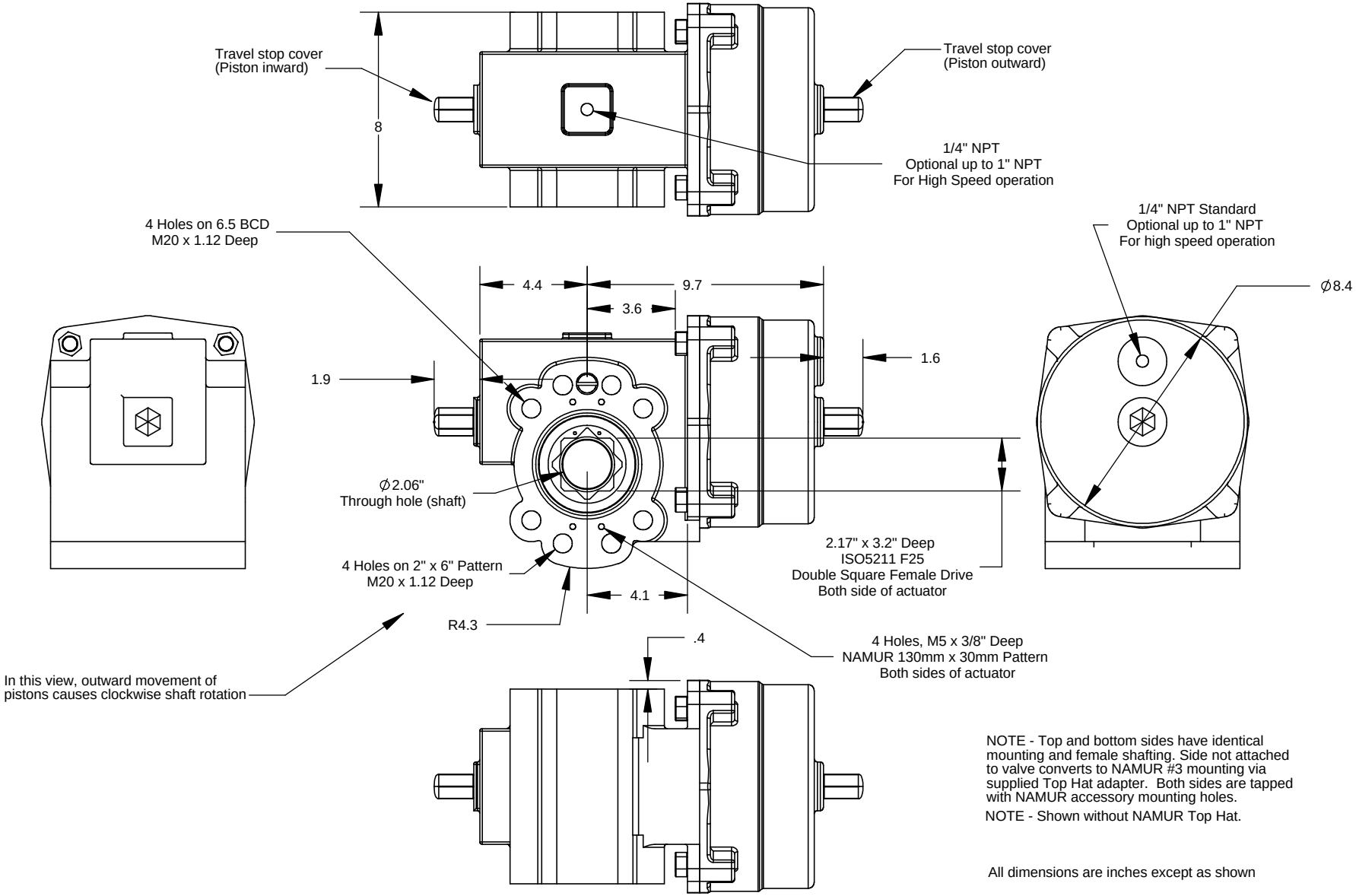

NOTE - Top and bottom sides have identical mounting and female shafting. Side not attached to valve converts to NAMUR #3 mounting via supplied Top Hat adapter. Both sides are tapped with NAMUR accessory mounting holes.

NOTE - Shown without NAMUR Top Hat.

All dimensions are inches except as shown

See drawing DQB12xx001A for NAMUR accessory drive

QB12DA Dimensional Drawing w/o Accessory Drive

Do not use for production purposes unless certified	Dimensions certified by: _____ Date: _____	**QTRCO** Dimensional Drawing	Model QB12DA	Drawing # DQB12DAxx001A